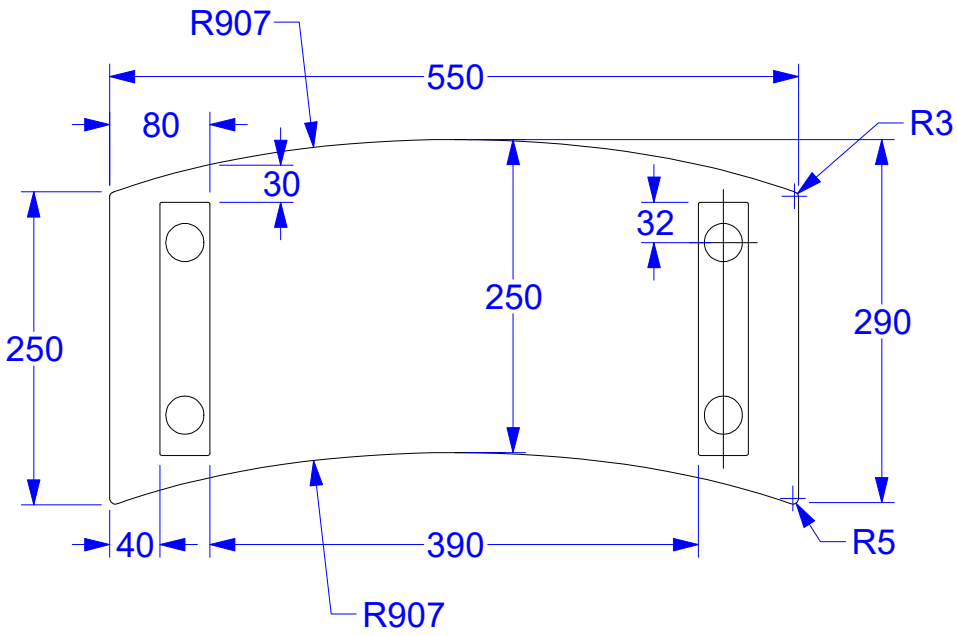

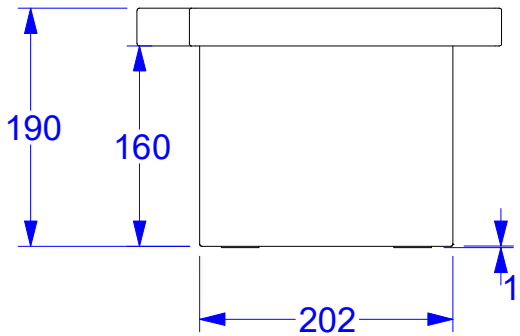

DRAWN YURI TYMOCHKO	2017-03-09	aquatica PLUMBING		
CHECKED		TITLE True Ofuro Step		
QA				
APPROVED				
		SIZE C	DWG NO	REV
		SCALE		SHEET 1 OF 1